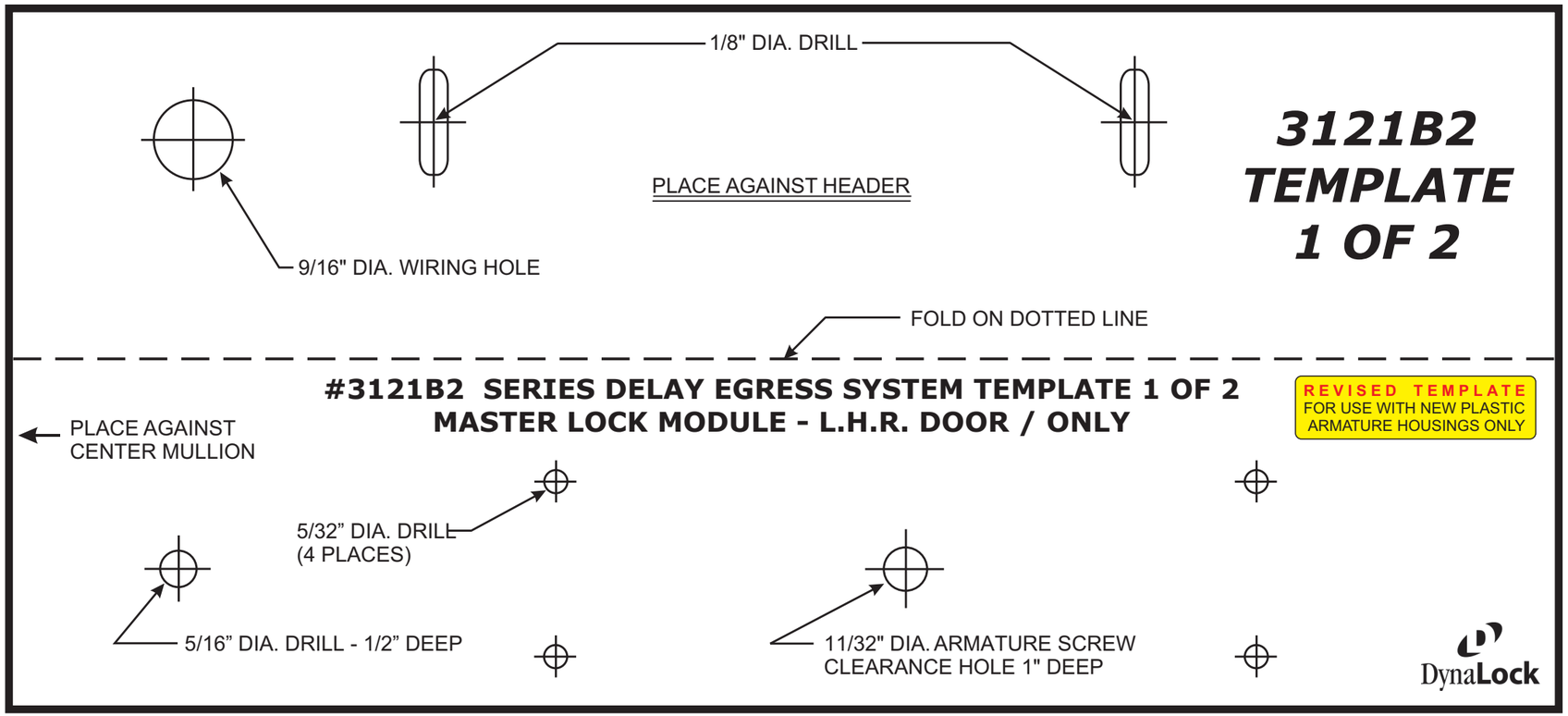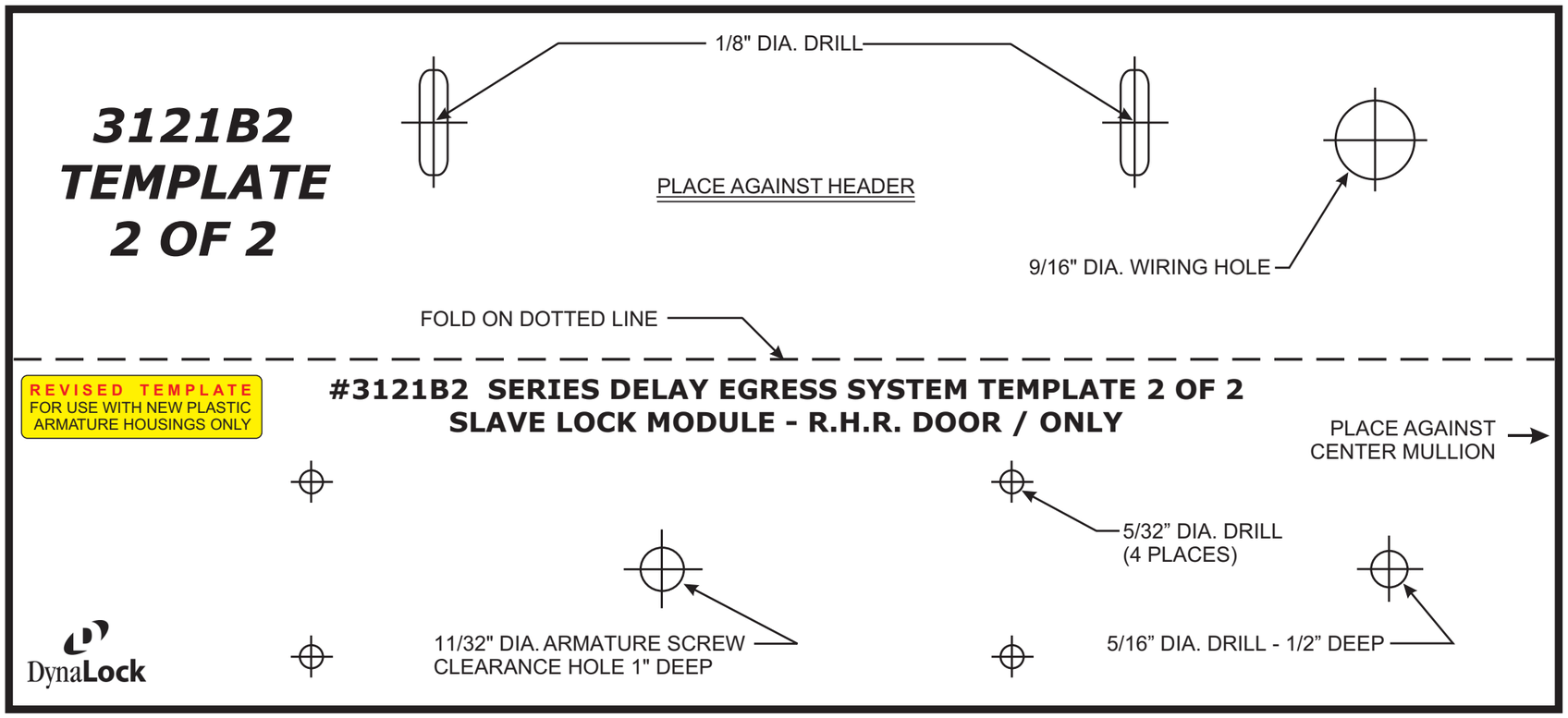PRINTING INSTRUCTIONS: SET PAGE SCALING TO NONE. USE 11X17 TABLOID PAPER.