DynaLock
705 Emmett Street • Bristol, CT 06010
1-877-DynaLock • www.dynalock.com

3101/3101BxETR SERIES ELECTROMAGNETIC LOCKS

SUPPLEMENTAL INSTRUCTIONS

READ THIS FIRST!

These supplemental instructions supersede all references to the armature in the 3101xETR and 3101BxETR Series installation manuals. Armatures now utilize a plastic housing which may contain magnets for use with the Door Status Monitor option, and the rubber washer has been eliminated from the hardware pack.

ARMATURE INSTALLATION

Attach the armature housing to the door using four (4) #8x1" sheet metal screws or drill and tap for 8-32x3/8" machine screws (see template). Attach the armature to the door as shown. Firmly tighten the armature mounting screw using a 3/16" hex wrench.

Failure to properly secure the armature to the bracket could result in serious injury or possible security breach.

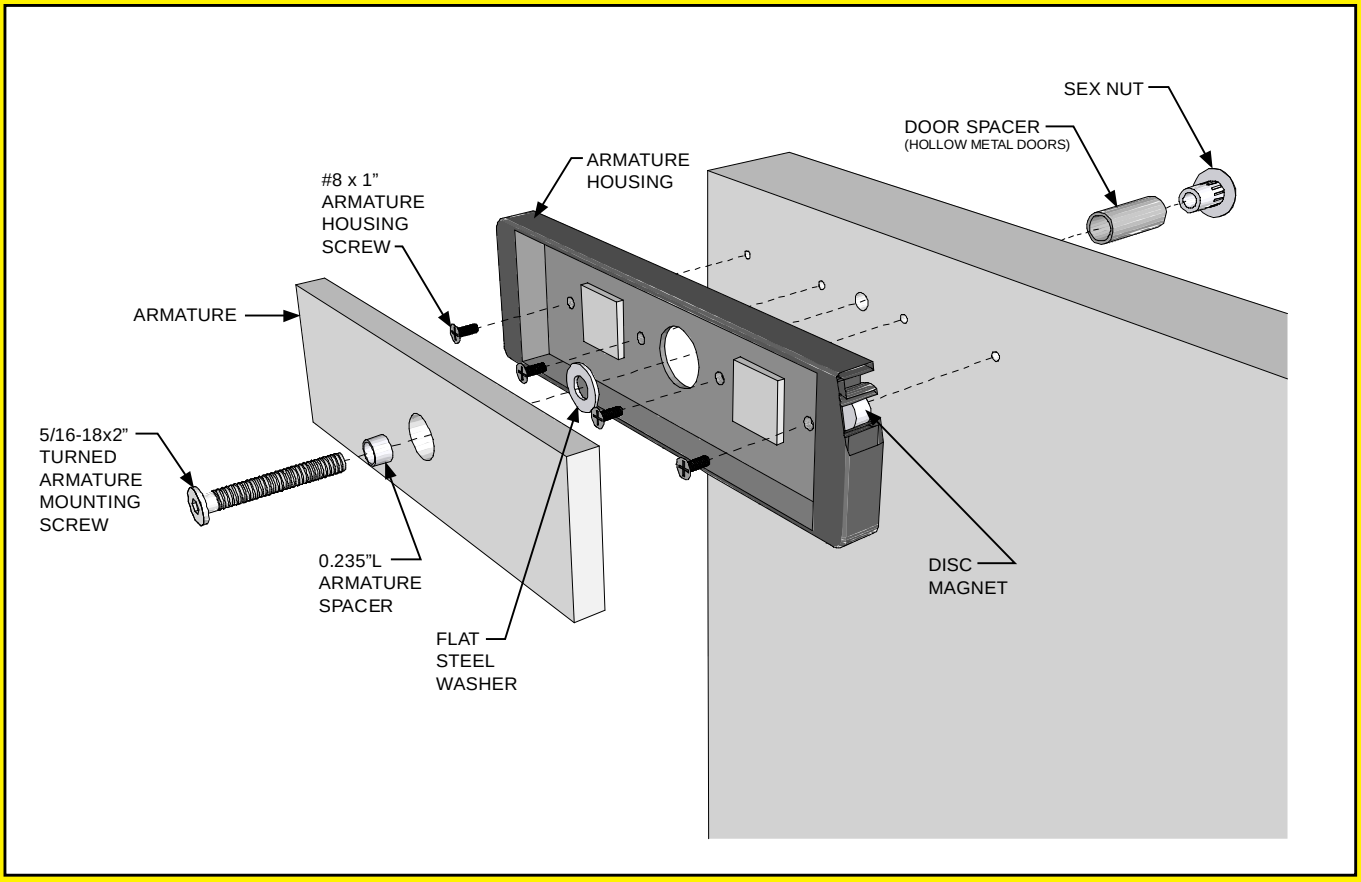

NOTE: For locks ordered with the DSM or HSM option, please verify that two magnets are installed inside the armature housing.